INTERPRETATION OF DEFINITE NOUN PHRASES

L. Ardissono, L. Lesmo, P. Pogliano, P. Terenziani
Dipartimento di Informatica -Universita' di Torino
C.so Svizzera 185 -10149 Torino- Italy
Tel. 39 - 11 - 7712002
E-Mail: lesmo@di.unito.it

Abstract

The paper addresses the referential properties of definite NPs and introduces a homogeneous framework for coping with ambiguities in reference and with the generic/specific and referential/attributive dichotomies. The basic assumption is that an ambiguous "logical form" is the most reasonable tool for carrying out the interpretation process without propagating existing ambiguities in unnecessary ways.

The ambiguities in reference are shown to be analyzable perspicuously in terms of three independent parameters: the context, the world, and the time in which the sentence is used. Different readings of NP's arise from the fixing of one or more of these parameters, going from the most general (the "intension" or "concept", where nothing is fixed) to the least general (the usual "definite specific" reading, where all the parameters are fixed).

Beyond the ambiguities in reference, the distinction between collective and distributive readings and the one between the readings we call relational and non relational are analyzed and the relationships among the different kinds of ambiguities are examined.

1 Introduction

This paper is concerned with the meaning of definite noun-phrases. The basic assumption of our work is that a context-independent semantic representation of NL sentences can be provided and that such a representation must be the basis for further contextual processing. The basic problem with this approach is that some semantic ambiguities can be resolved only by taking into account the context where the ambiguous expression occurs. Since the basic goal of a semantic formalism is to provide a tool for representing disambiguated meanings (such that logical inferences can be made), it seems that the delaying of the intervention of the context cannot be attained. In some cases, however, it is the subsequent context that provides the understander with the required information. In these cases, multiple alternatives should be carried about, until the required information is made available. In principle, if a single ambiguous expression is embedded in a very complex sentence, the whole propositional content must be duplicated in order to have two (or more) alternative well-formed representations.

In [Di Eugenio & Lesmo 87], it has been argued that it is reasonable to maintain ambiguity as locally as possible. In the network-based formalism proposed therein for representing the meaning of Italian sentences, expressions featuring referential ambiguity are represented via groups of nodes called "reference ambiguity spaces" (RAS). The propositional content of a sentence is represented in three spaces: the Content Plane (CP) contains the information about the main predication and the descriptions used for the participants in the event (the arguments of the predicate); the Reference Plane (RP) contains the RAS's that make explicit the ambiguities in referring; the Semantic Plane (SP) contains the domain theory expressed as a terminological semantic net.

The use of an ambiguous logical form (see also [Hobbs 83]) should not be taken as a statement of sequentiality in the processing: first semantic interpretation, then contextual disambiguation. We believe that all processes (including syntactic analysis) must be strongly interleaved and that the higher levels must provide a feedback to constrain the lower ones. What we believe is that the proposed representation may constitute an "interlingua" that allows the processes to communicate with each other.

While the overall architecture has largely remained unchanged (only, a fourth plane, the Temporal Plane, has been added to represent temporal information [Grasso et al. 90]), further studies have shown that the internal structure of the RAS's is partially inadequate to handle the full range of semantic ambiguities involved in definite descriptions.

2 Descriptions and reference

The role of a definite noun phrase in a sentence is to identify an entity (or a group of entities) about which a predication is made. On the other hand, it seems that such a construct can be used to denote very different things, as shown by the following examples:

1) The triangle is the poligon with three sides
2) The bear hibernates in winter
3) The dog is eating in the garden
4) The murderer, whoever he is, is insane
5) The winner will go to Hong Kong
6) The temperature is rising
7) The bear is dying out

8) The dog is a mammal
9) The president changes every seven years
10) Your apartment keeps getting bigger and bigger
11) In ancient times, the dog was wild

Moreover the role the denotation has in the predication may vary:

12) The men ran very fast
13) The men lifted the piano

Many of the examples above have been carefully analyzed from different points of view. Montague's position was that a definite description is in principle able to denote the full intension of the associated common noun, but in some cases the linguistic context can constrain it to the extension at the current index. One of the problems with the Montagovian approach is that the distinction intension/extension does not seem to be fine-grained enough. For instance, **to rise** (see **ex.6**) is considered as an intensional predicate. Clearly, the extension of **temperature** is not sufficient to verify the truth value of the proposition, but it seems that its intension includes much information that is completely irrelevant, since what is needed is just the temperature in the current world and location in immediately previous and successive times.

The problem of definite descriptions in which the referent seems to be fixed by the context, but his/her "identity" is not known (**ex.4**) has been discussed in [Donnellan 66] [Kronfeld 86]. In this case it is not possible to say that a particular individual is selected by the description, but only that some of his/her relevant features (relevant as regards the whole predication) are included in the description. In reality, epistemology seems to creep in: actually, the description selects one and just one precise individual, but, as a matter of fact, the speaker is not able to specify who s/he is. This kind of use is called "attributive" by Donnellan, since, as stated above, the description must be an "attribute" of the referent that, in some sense, is relevant in the predication; in **ex.4** the hearer feels that the referent (whoever s/he is) is insane because s/he is the author of such a horrible crime (see also [Barwise & Perry 83]). Donnellan's analysis is very appealing, but it is not very clear how it can be integrated in a more general framework. A first answer to this problem comes from the work by Fauconnier [85].

Fauconnier analyses in great depth the non referential reading of definite descriptions. He introduces the informal notion of "role": the "roles" represent not only the "classical" attributive readings (**ex.4**), but also the readings in which the identity of the referred individual (the "role filler") varies depending on the time, such as in the preferred reading of **ex.9** and **ex.10**.

The readings we considered so far are specific (referential or non referential), i.e. predications about a contextually defined individual or set of individuals. A different case is the one where the assertion is "generic", in the sense that it applies to a class (**ex. 7**) or to all the members of a class (**ex. 8**). Lyons [77] suggests that there is not a unique kind of "generic" propositions, and defines the subclass of "essential" propositions, which are to be interpreted as stating the necessary and sufficient conditions which characterise the membership in a given class (**ex. 1**). In general, "generic" propositions are not so strong, and assert a "typical" or "general" characteristic of the given class which must not necessarily hold for each individual of the class[1] or at every time (**ex. 11**).

A final problem that we are going to deal with is not really concerned with ambiguities in reference, but it appears to be at least partially connected with it, since it involves the use that is made of the set of entities identified by the description. In fact, a singular definite reference to a class or a plural definite description (**ex. 12, 13**) introduce a further ambiguity, depending on whether the assertion applies to each one of the individuals constituting the class (set) referred to (distributive reading) or to the class (set) considered as a whole (collective reading) [Webber 83].

3 Treatment of Definite Noun Phrases

Our goal is to specify a representation formalism and to develop an interpretation process able to cope with the problems about reference. According to the program presented in the Introduction, the formalism must deal with ambiguity locally, in the sense that ambiguities should not cause the duplication of non-ambiguous components of the proposition. Though the obtained representation can not be assimilated to an unambiguous logical form, it provides the understander with a tool that can be worked upon by contextual disambiguating processes that could finally produce the chosen reading.

Some of the representation formalisms that have been proposed in the literature deal (at least partially) with such phenomena, but they do not stress enough the way the representation is built. For example, Webber's logical formalism [Webber 83], is able to represent definite and indefinite NPs, collective and distributive readings, generic sets; on the other hand, her aim is to derive entity descriptions that allow her to solve subsequent anaphoras, so that she generates such descriptions from sentences that have already been translated into a logical formalism, but the way she represents the NP appearing in the sentence while the sentence itself is processed is not clear.

Other approaches adopt the strict compositionality proposed by Montague (consider for example [Carlson 77]), but this move forces the introduction of syntactic ambiguities in many cases where only a semantic ambiguity is perceived. Moreover, the existence of one basic reading that has to be modified in special cases (see, for instance, the Gn operator in [Carlson, 77]) seems to increase the complexity of the interpretation process.

Our present analysis extends the proposal presented in [Di Eugenio & Lesmo 87] and assumes that the phenomena discussed can be dealt with perspicuously by distinguishing three different levels of ambiguity, which, of course, interact with each other:

- the basic reference of the NP, that is the specific/generic and the referential/"role" dichotomies

[1] The inadequacy of the universal quantifier for representing "generics" has been pointed out by many authors. Some recent proposals involve the introduction of non standard quantifiers [Barwise & Cooper 81] or of a kind-forming operator [Schubert & Pelletier 87].

- the relational/non-relational ambiguity, which concerns sentences like **ex.6**
- the distributive/collective ambiguity.

Note that it is the first level that must specify which are the actual entities involved in the predication, while the other ones say different things: the second level says whether the evaluation of the truth value of the proposition is "local" (in a sense to be specified) or not, while the third level says how the predicate must apply to the selected entities. Thus, the RAS is concerned with the first level only. The other ambiguities must be handled elsewhere.

In the intensional logic of Montague, the extension is picked from the intension by fixing the value of an index on possible worlds. It is well known that indices on worlds can be split in subcomponents, in order that each subcomponent is related to a characteristic of the context where an utterance is made that is salient to the interpretation of the utterance itself ([Lewis 72] proposes eight such subindices and leaves open the possibility of introducing other ones). In principle, the extension of a definite noun phrase refers to a contextually determined group of individuals, because the (global) index must be able to specify at the finest level of detail the context. But it seems that generic propositions work in exactly the opposite way: some contextual features (for instance, who is the speaker, or where the utterance is made) are completely irrelevant to the truth of the proposition. Thus, we need at least three levels of detail:

- the proposition is independent of the index; its truth value depends neither on the world nor on the specific situation. Thus, it must be evaluated with respect to all the entities that satisfy the description in all worlds. These are Lyons' "essential" propositions.
- the proposition is partially dependent on the index; its truth value depends on the status of the "world" (in a non technical sense), but not on the situation; the predication is assumed to apply to all the entities that "in the current world" satisfy the description. These are generic proposition that are not essential.
- the proposition is fully dependent on the index: the world and the situation must be known in order for the truth value to be determined. These are the specific referential readings of the NP.

A place for roles can be found in this picture, if we consider that there is another route to go from the most general (intension) to the most specific (individual): we could fix the situation and let the world vary. Thus, we assume there is a situation where a murder happened in a certain place, and consider all the worlds compatible with this event: in all these worlds, we can say, the murderer is insane; whoever he is, of course, since in different possible worlds the individual which is "the murderer" can be different. Now, if we also fix the world, we have fixed the whole index, so that the specific referential reading of "the murderer" comes about.

There are a lot of things to be careful about, however. The most important of them is the trans-world correspondence. What does it mean that the context is maintained fixed, but the world may change? What does it mean that different individuals (existing in the current world?) may fill the role of murderer? The problem is too complex to be assessed here, but we can try to present some ideas about it. First, different worlds are different in different ways. Some of them are worlds of fiction and imagination. Some of them are possible states of the real world. In the latter case we are faced with epistemic issues: the current world is one and the same, but our knowledge about it is incomplete. As far as a speaker may know different actualities may realize. In these "epistemically possible" worlds, some kind of trans-world identification of individuals must hold: do real individuals continue to exist across possible worlds (see [Kripke 72] for an in depth discussion about this issue)? We believe that people assume that the world is made of a fixed set of individuals, but that different descriptions could not be able to pick out the same individual, even if they "refer" to the same one, because of lack of knowledge. This does not mean that fictitious (or "counterfactual") worlds should not be taken into account, but only that in these cases some explicit clue about such a change of perspective must be provided. In this framework, taking the "possible epistemic world" as the component of the index, of which the "attributive reading" is independent seems perfectly reasonable.

But there is another parameter that deserves attention: the "time". In the epistemic view introduced above, it is clear that a "possible world" is just a possible "current" world. Thus, changes of denotation across time must be dealt with separately. And, in fact, there are cases where the denotation of a definite description seems to consist in the set of individuals that have filled a given role in different times. If I say:

14) The Presidents of Italy have been 8

what I mean is that, in the actual world, there have been in the past years a fixed number of changes of the President. This is not a property of the current President, whoever he is, nor a generic characteristic of Italian Presidents, but a matter of fact concerning what has happened in the "real" world. Thus we believe our formalism should be able to account also for a third component: the time. Now, there is a an undeniable connection between possible worlds and future times, especially if we maintain the epistemic point of view outlined above: future is epistemically underdetermined, so that no definite description involved in a predication extending in the future can be assumed to refer to a fixed set of individuals. For this reason, we are forced to admit a limited view of time independence: a predication is independent only of time (and not of the world) if it refers to a set of individuals filling a given role in the past. This is clearly problematic, since the actual set to consider depends on what is "past", i.e. on the time of utterance, but its import will become clear in the discussion that follows.

Therefore, the parameters we consider as basic in determining the reference of a definite noun phrase are three: the world (W), the context (C), and the time (T). The denotation of a definite NP may be independent of none, one, or more of them, thus giving rise to different readings. The ambiguity structure (the RAS) must consequently be extended according to these three parameters. The internal structure of the new RAS's is shown in fig.1.

Let us see now in more detail the meaning of the nodes in the RAS.

RAS

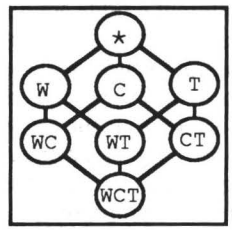

Fig.1 - Basic ambiguous representation of the reference of definite NP's. T,C, and W represent the time, context and world indices respectively, and a node marked by some of these labels represents the reading where the corresponding indices are fixed.

* CONCEPT: The referent of the NP does not depend on the world, context and time of the utterance (intension). Ex: "The triangle is the polygon with three sides"

W ACTUALIZED CONCEPT: The referent of the NP depends only on the world. Ex: "The dog has always been and will forever be the best friend of the man"

C OFFICE: The referent of the NP depends only on the context. Ex: "The president is elected by the Parliament"

T #: The referent of the NP depends only on the time. This kind of reference is not allowed. See below.

WT EXTENSION: The referent of the NP depends on world and time. Ex: "The bear is dying out"

WC TEMPORAL EXTENSION: The referent of the NP depends on context and world. Ex: "The president has always been a white man"

CT ATTRIBUTIVE: The referent of the NP depends on context and time. Ex: "The murderer is insane"

WCT SPECIFIC: The referent of the NP is determined at a given world, context and time. Ex: "The dog is running in the garden"

Intuitively, the upper side of the "cube" in fig.1 formalises the generic readings and the lower side represents the individual readings. In particular, the C, WC and CT nodes collect the informal notion of "role" proposed by Fauconnier and the CT node represents the "classical" notion of attributive reading.

Note that, basically, all the readings are available for each NP, the only exception being the T reading. Maybe, we have not been able to find a good example, but it seems problematic to fix the time and let all other things vary, since the relativization to a particular time seems to involve a contingency that is in contradiction with the generality of world and context independence.

4 Relational/non-relational and distributive/collective

So far, we considered the basic referential properties of definite NP, and we defined the RAS's accordingly. But the structure proposed is not concerned with examples as **ex.6, 9, 10**, in which the "relational" reading is involved, and **ex.12** and **13**, in which the distributive/collective ambiguity must be considered.

The basic problem with relational readings is that a predication about an individual involves a comparison and thus something which can act as second term of the comparison must be identified. This difficulty forced Montague to consider predicates as "to rise" as intensional: the whole intension of the subject appears in the resulting formula. It is clear that these predicates are not limited to SPECIFIC readings (as "the temperature" in **ex.6**), but can also apply to ATTRIBUTIVEs:

15) The murderer has become more insane

to EXTENSIONs (**ex.7**), OFFICEs (**ex.9**), and so on. It is evident that the other comparison term need not be outside the denotation. In particular, most comparisons involve a change over time, so that when the denotation is independent of T all required data are already available. But this does not affect the overall picture: in order to determine the truth value of the sentence, you must apply the predicate to all individuals in the denotation; in case of relational predicates this involves taking into account, for each individual, another individual to carry out the comparison and the fact that this latter also happens to be in the denotation is irrelevant.

Actually, the discussion above is slightly inaccurate: we have talked about different individuals to compare, but "relational" readings involve an intrinsic ambiguity: is the referent of the NP or a property of the referent (uniquely determined at an index) that must be evaluated more than once? This ambiguity emerges clearly from **ex.10.** Is the size of your current apartment or the size of different apartments (that belong to you at different times) which must evaluated at different time indexes and then compared? In both cases we take the predication to be relational, but in the former case it is only a property (the size) that is involved in being evaluated at different times, while in the latter one it is the identity of the referred individual that changes. This ambiguity is dealt with on the basis of our explicit representation of properties and will not be analyzed in further detail here.

The distributive/collective ambiguity arises whenever a (generic or specific) set of referents is determined by the NP. This dichotomy has been carefully analyzed in the literature [Webber 83], and we do not have anything new to say about it, except pointing out again that it applies to most of the different denotations of a definite NP (if it includes more than one member) and that it is compatible both with relational and non-relational readings. Thus, **ex.7** is an example of <EXTENSIONAL, relational, collective> reading, while **ex.13** features a <SPECIFIC, non-relational, collective> reading.

Other examples may be found, but the main point of this section is the independence of the relational/non-relational and the collective/distributive dichotomies of the basic reference. Thus, the dichotomies discussed in this section are orthogonal to the referential distinctions, and must be dealt with at a different level. The DRAS (Distributive/Collective Relational/Non-Relational Ambiguity Space) is introduced in the SP in order to represent such semantic ambiguity. It contains four nodes: DN (distributive non-relational reading), DR (distributive relational reading), CN (collective

non-relational reading, CR (collective relational reading). See, as an example, DRAS1 in Fig.2.

5 Interpretation process and disambiguation

When a NP head is met, a DRAS on the Content Plan (CP) and a RAS on the RP are created. All the nodes in the DRAS and RAS are marked as active, in order to represent the fact that all the readings are available. RAS's and DRAS's embody the ambiguities internally, and hide them from the other components of the representation. If the ambiguity can be solved at the syntactic and semantic level, the contents of these ambiguity spaces are modified in order to convey this information without affecting the other parts of the sentence; otherwise, the still ambiguous (or partially ambiguous) spaces will be passed to the process that accesses the pragmatic knowledge and/or the discourse context.

In some cases, the kind of predication determines the correct reading, but this is not always true. The "relational" reading is forced by the explicit presence in the input sentence of relational indicators, such as verbs like *change, be or become + comparatives, increase, diminish* etc., and some stative predicates, such as *be rare / common / widespread* admit only a collective reading [Carlson 77]. However, in most cases, the task of disambiguating among the different interpretations of a NP is not easy and cannot be fully dealt with without taking into account world knowledge and the discourse history. However, some useful syntactic and semantic criteria do exist, and they have been implemented in the GULL system as disambiguation rules. What follows is a very sketchy discussion of some of the features that have been taken into account.

5.1 Tense, Aspect and Actionality

Tense (past, present or future) and aspect (perfective, progressive or habitual) have a strong impact on the ambiguities above. In particular, the tense plus the perfective and progressive aspect allow to fix the **time** index [Reichenbach 47], and usually force a specific reading (however, see [Schubert & Pelletier 87]), while with the habitual aspect also the generic reading is available:

16) The dog eats meat

As regards the actionality of the sentence (i.e. its being stative/non-stative, telic/atelic, instantaneous/durative), there are some interesting connections between "telicity" [Dowty 77] and distributivity. For example, while the "telic" (that is, "having a goal") sentence

17) The men were writing a letter

admits both a distributive and a collective reading (in which the men were co-operating in order to reach the goal), the "atelic" sentence

18) The men were hiccuping

hardly features the collective reading. Of course, also the determination of the telic/atelic character of sentences constitutes a very difficult task [Grasso et al. 90].

5.2 NP Specifications

In most cases, a possessive adjective, especially in the first or second person, makes a generic reading impossible (note that in Italian the possessive adjective does not "include" the article, as it does in English)

19) Il tuo cane mangia sempre la carne - (The) your dog always eats meat -

Moreover, the "role" reading is made quite probable by the presence of a possessive adjective or by a relative clause which, in some sense, is causally related to the main assertion, as in

20) The man who killed Mr. Smith so brutally is insane.

5.3 Mutual influence of NP interpretations

A global generic or specific interpretation seems to be preferred over one where some NPs are specific and others generic. In particular, the NP head cannot be given one interpretation (specific/generic) and its specification the other (generic/specific):

21) La donna con la gonna e' molto elegante - The woman with the skirt is very elegant

may be generic or specific, while

22) La donna con la tua gonna e' molto elegante - The woman with (the) your skirt is very elegant

can only be specific. The same consideration holds for different complements of the same verb, although the disambiguation of one complement by means of another is not certain, because counterexamples do exist, as in:

23) Il cane di Giorgio mangia le aringhe - The dog of Giorgio eats (the) herrings

where, although "the dog of Giorgio" refers to a specific entity, the sentence does not refer to a specific set of herrings, but to a habit of that dog.

5.4 An example

The disambiguation rules apply to an ambiguous representation (DRASs and RASs) and limit the range of possible alternatives by reducing the number of active nodes inside the appropriate ambiguity spaces. For example, let us briefly consider the semantic interpretation of the sentence

24) The murderer is trembling

After the analysis of the NP, a RAS and a DRAS are instantiated, and all internal nodes are marked as active. The present progressive has a double effect:

1) it makes the generic reading implausible (actually, counterexamples do exist, but our rules are "preferential" in that the most common readings are chosen, unless other information contrast it)

2) it fixes the time dependency of the sentence on the time of the utterance

The corresponding disambiguation rule copes with these effects by

1a) disabling all the nodes in the RAS which represent generic readings (this amounts in disabling the upper side of the "cube", i.e. the *, W, T, WT nodes)

2a) disabling all the nodes in the RAS which represent readings in which the time index is not fixed (i.e. the C and WC nodes)

Finally, 1a, together with the fact that the NP head is singular, activates a further disambiguation rule, stating that the collective reading is not available (this is obtained by disactivating the CR and CN nodes in the DRAS). At the end of the analysis, another disambiguation rule is triggered

by the absence of any indicator of relationality in the input sentence, and it disables the still active nodes representing

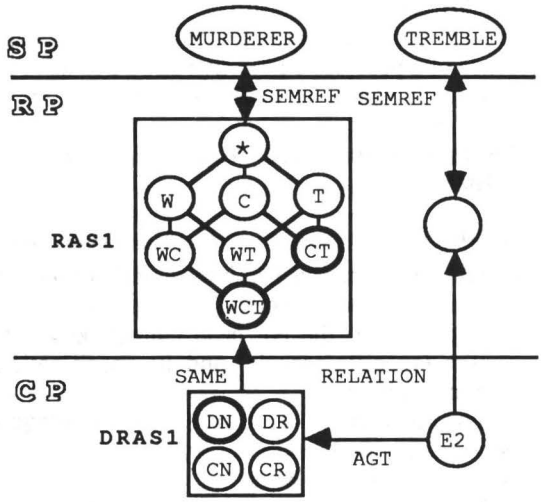

Fig.2 - Final (ambiguous) representation of the sentence "The murderer is trembling". The SAME and RELATION arcs connects the nodes of the CP to the corresponding referential structures of the RP, and the SEMREF arcs link the latter to the concepts in the SP (see [Di Eugenio & Lesmo 87]. Bold nodes represent active nodes in the ambiguity structures.

relational readings (in our case, the node DR). The final representation of the sentence is shown in figure 2.

Note that the sentence is still ambiguous, since both an attributive (CT) and individual (WCT) readings are available. In this case, the partially ambiguous space will be passed to the processes that access the pragmatic knowledge and/or the discourse context.

6 Conclusions

The paper has presented a formalism for representing the different readings featured by definite Noun Phrases. The distinctive feature of the proposed approach is that the representation maintains the ambiguity involved in definite NP until the information needed for the disambiguation is made available. Many examples have been presented and discussed in order to demonstrate the complexity of the problem and the suitability of our approach. The careful reader could have noted, however, that most examples include singular definite NP and that only their occurrence in the subject position has been analyzed.

As regards plurals, they are currently handled by using the extended RAS's presented in the paper: no extra difficulty has been found, except that some appropriate disambiguation rules have been introduced. The situation with cases different from the subject is a bit more complex; in **ex.1**, the only possible referent for **the poligon with three sides** is the concept, but this causes some problems, since what is stated by the sentence is that "each triangle is a poligon with three sides" (and vice-versa). This is not immediately clear if we simply represent it as identity between the two CONCEPTs, as we currently do.

However, it seems that the extended RAS in the current version covers a vast range of phenomena and that it provides us with a reasonable basis for facing the problems mentioned above and for more substantial extensions of coverage (as mass nouns and indefinite descriptions).

The current version of the interpretation system is implemented in LISP an runs on SUN workstations under the UNIX operating system.

References

[Barwise & Cooper 81] J. Barwise, R. Cooper: Generalized Quantifiers in Natural Language. Linguistics and Philosophy 4 (1981), 159-219.

[Barwise & Perry 83] J. Barwise, J. Perry: **Situations and Attitudes**. MIT Press, Cambridge, MA (1983).

[Carlson 77] G. Carlson: References to Kinds in English. Ph. D. Dissertation, Amherst, MA: University of Massachusetts (1977).

[Di Eugenio & Lesmo 87] B. Di Eugenio, L. Lesmo: Representation and Interpretation of Determiners in Natural Language. Proc. IJCAI, Milano (1987), 648-653.

[Donnellan 66] K. S. Donnellan: Reference and Definite Description. Philosophical Review, 75 (1966), 281-304.

[Dowty 77] D. R. Dowty: Toward a Semantic Analysis of Verb Aspect and English "Imperfective" Progressive. Linguistic and Philosophy, 1 (1977), 45-77.

[Fauconnier 85] G. Fauconnier: **Mental Spaces**. MIT Press (1985).

[Grasso et al. 90] E. Grasso, L. Lesmo, V. Lombardo, P. M. Maccario, R. Salato, P. Terenziani: Semantic Interpretation of Tense, Actionality and Aspect. Proc. ECAI, Stockholm (1990), 320-325.

[Hobbs 83] J.R. Hobbs: An improper treatment of quantification in ordinary English. Proc. ACL-83 (1983) 57-63.

[Kripke 72] S. Kripke: Naming and Necessity. In D. Davidson, G. Harman eds, **Semantics of Natural Language**, Reidel Publ. Co. (1972), 253-355.

[Kronfeld 86] A. Kronfeld: Donnellan's Distinction and Computational Model of Reference. Proc. ACL (1986), 186-191.

[Lewis 72] D. Lewis: General Semantics. In D. Davidson, G. Harman eds, **Semantics of Natural Language**, Reidel Publishing Company (1972), 169-218.

[Lyons 77] J. Lyons: **Semantics**, vol. I. Cambridge Univ. Press (1977).

[Reichenbach 47] H. Reichenbach: **Elements of Symbolic Logic**. The Free Press, N. Y. (1947).

[Schubert & Pelletier 87] L. K. Schubert, F. J. Pelletier: Problems in the Representation of the Logical Form of Generics, Plurals, and Mass Nouns. In Lepore ed.: **New Directions in Semantics**. Academic Press (1987).

[Webber 83] B. Webber: So What Can We Talk About Now? In Brady, Berwick eds., **Computational Models of Discourse**, MIT Press (1983), 331-371.