PARSING CIRCUIT TOPOLOGY IN A DEDUCTIVE SYSTEM

Takushi Tanaka

The National Language Research Institute
3-9-14 Nishigaoka Kita-ku, Tokyo 115, Japan

ABSTRACT

As a step toward automatic circuit understanding, we have developed a method for parsing circuit topology in a deductive system called Duck. A circuit is viewed as a sentence and its elements as words. Generating circuits with specific functions is represented by deductive rules analogous to definite clause grammars. Using those rules, an object circuit is decomposed into a parse tree of functional blocks in terms of logic programming.

I INTRODUCTION

Electronic circuits are designed as a goal oriented composition of basic circuits with specific functions. Therefore, understanding a circuit means finding a hierarchical structure of functional blocks and rediscovering the designer's original intentions. Almost all designed circuits have the features of language which carries information of the speaker's intentions mapped on its structures. In addition, a circuit schematic not only represents a physical circuit, but also functions as a written language for electronic engineers.

We have developed a method for parsing circuit topology in a deductive system called Duck [2]. A circuit is viewed as a sentence and its elements as words. Generating circuits with specific functions is represented by the deductive rules analogous to definite clause grammars [3]. Using those rules, an object circuit is decomposed into a parse tree of functional blocks in terms of logic programming. The parsing circuit topology is a step toward automatic circuit understanding.

II REPRESENTATION OF CIRCUITS

A. Circuit and its Elements

Figure 1 shows a small portion of an analog IC circuit [6]. We call the circuit CD71. The circuit is represented as follows in our system.

```
!<(RESISTOR R1 #12 #1) (RESISTOR R2 #2 #10)
  (RESISTOR R3 #2 #3) (RESISTOR R4 #3 #1)
  (RESISTOR R5 #2 #4) (NPN-TR Q1 #9 #11 #10)
  (NPN-TR Q2 #3 #11 #2) (NPN-TR Q3 #4 #12 #11)
  (NPN-TR Q4 #4 #5 #4) (NPN-TR Q5 #5 #1 #5)>
```

"RESISTOR" is a 3-place function in logic. "(RESISTOR R1 #12 #1)" denotes a resistor named R1 connecting node #12 and node #1. The node order is arbitrary because a resistor does not have polarity. "(NPN-TR Q3 #4 #12 #11)" denotes an NPN-transistor named Q3 with the base connected to node #4, the emitter to node #12, and the collector to node #11 respectively. A circuit is represented by a tuple of those terms surrounded by "!<" and ">". The order of the elements in the tuple is not important.

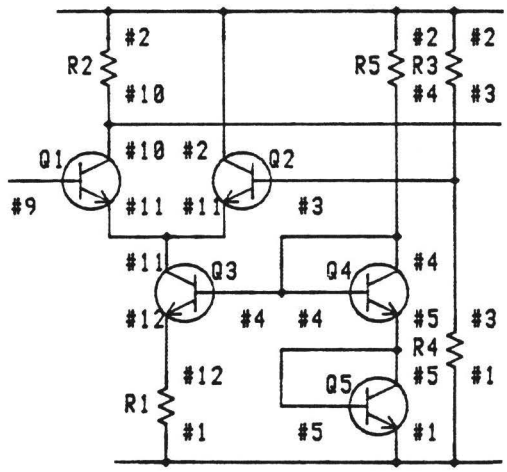

Figure 1: Circuit CD71

B. Macro Elements

In designing analog IC circuits [6], there are many functional blocks which are viewed as macro elements (macro devices). The macro elements in Figure 1, such as "diode-connected transistor", "series circuit of diodes", and "voltage regulator" are represented as follows in the parsing process of the circuit.

```
(D-TRANSISTOR (FD Q4) #4 #5)
(D-TRANSISTOR (FD Q5) #5 #1)
(S-DIODE (S-DD (FD Q4) (FD Q5)) #4 #1)
(V-REGULATOR
  (V-REG (S-DD (FD Q4) (FD Q5)) R5) #2 #4 #1)
```

The term "(D-TRANSISTOR (FD Q4) #4 #5)" denoting "diode-connected transistor" has the same arguments as an ordinary diode. That is, the first argument "(FD Q4)" is the name of the diode. The second is its anode #4, and the third is its cathode #5. "(S-DIODE (S-DD (FD Q4) (FD Q5)) #4 #1)" denotes a series circuit of diodes. A new name "(S-DD (FD Q4) (FD Q5))" is given to the circuit as a macro

element. Macro elements correspond to non-terminal symbols, while ordinary elements terminal symbols.

III PARSING CIRCUIT TOPOLOGY

A. Rules for Parsing

In order to find a specific element in a circuit, a membership predicate "MEM-REST" is defined by the following assertion.

```
(MEM-REST ?M !<!&?L ?M !&?R> !<!&?L !&?R>)
```

"?"-marked symbols are universally quantified variables. The notation "!&?X" matches any number of elements of a tuple, binding ?X to a tuple of those elements. So "<!&?L ?M !&?R>" matches any tuple of one or more elements, and binds ?M to a member of the tuple, ?L to the left part, and ?R to the right part of the rest [2]. Using the predicate "MEM-REST", we can separate an object circuit into an element and the rest:

```
(MEM-REST element object-circuit rest)
```

When we want to refer to macro elements in a circuit, we will use a predicate "SUBCT" (sub-circuit) similar to "MEM-REST". The difference is that the first argument of "SUBCT" is an abstract element (macro element) rather than a real one. The word "abstract" means that the element does not exist as a member of the tuple representing an object circuit. The abstract element is a sub-circuit with a specific function represented as a macro element:

```
(SUBCT macro-element object-circuit rest)
```

A macro element "diode-connected transistor" is defined by the backward chaining rule (1). The rule states that the existence of an NPN-transistor with the base and the collector connected to the same node implies the existence of a diode-connected transistor as an abstract element. The functions "D-TRANSISTOR" and "FD" are introduced as Skolem functions representing the existence of a diode-connected transistor and its name.

```
(<- (SUBCT (D-TRANSISTOR (FD ?Q) ?A ?C) ?CT ?REST)
    (MEM-REST (NPN-TR ?Q ?A ?C ?A) ?CT ?REST))  (1)
```

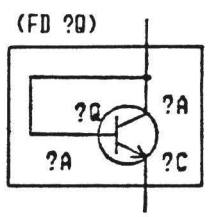

Figure 2: Diode-connected transistor

Rule (2) recursively defines "series circuit of diodes" as a macro element. The conjunctive part of the definition says "find a diode-connected transistor ?Q connected to ?A and ?B in the circuit ?CT", and "find a series circuit of diodes ?D connected to ?B and ?C in the rest of the circuit", then "give a name (S-DD ?Q ?D) to the macro element".

```
(<- (SUBCT (S-DIODE ?NAME ?A ?C) ?CT ?RT)
    (OR (SUBCT (D-TRANSISTOR ?NAME ?A ?C) ?CT ?RT)
        (AND
          (SUBCT (D-TRANSISTOR ?Q ?A ?B) ?CT ?RT1)
          (SUBCT (S-DIODE ?D ?B ?C) ?RT1 ?RT)
          (= ?NAME (S-DD ?Q ?D)))))                (2)
```

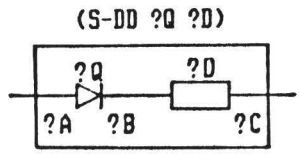

Figure 3: Series Circuit of Diodes

The following rule enables us to refer to a resistor represented by "(RESISTOR ?R ?A ?B)" or "(RESISTOR ?R ?B ?A)" as "(RES ?R ?A ?B)".

```
(<- (SUBCT (RES ?R ?A ?B) ?CT ?RT)
    (OR (MEM-REST (RESISTOR ?R ?A ?B) ?CT ?RT)
        (MEM-REST (RESISTOR ?R ?B ?A) ?CT ?RT)))
```

Macro elements such as "voltage regulator" and "current source" are also defined (Figure 4, 5).

```
(<- (SUBCT (V-REGULATOR
             (V-REG ?D ?R) ?IN ?OUT ?COM) ?CT ?RT)
    (AND (SUBCT (S-DIODE ?D ?OUT ?COM) ?CT ?RT1)
         (SUBCT (RES ?R ?IN ?OUT) ?RT1 ?RT)))

(<- (SUBCT (C-SOURCE
             (C-SINK ?VS ?Q ?R) ?SINK ?COM) ?CT ?RT)
    (AND
      (SUBCT (V-SOURCE ?VS ?B ?COM) ?CT ?RT1)
      (MEM-REST (NPN-TR ?Q ?B ?E ?SINK) ?RT1 ?RT2)
      (SUBCT (RES ?R ?E ?COM) ?RT2 ?RT)))
```

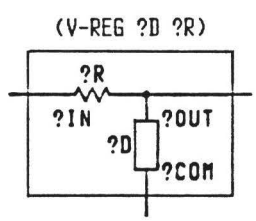

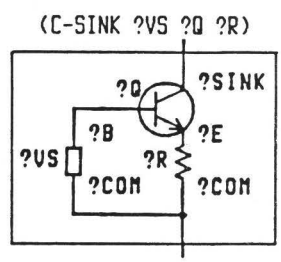

Figure 4: Voltage Regulator Figure 5: Current Source

B. Parsing Process

In definite clause grammars [3], a part of a sentence under processing is represented by two pointers. Each pointer is composed of a list of words occurring after that point in the sentence. The last two arguments ?CT and ?REST of the predicate SUBCT correspond to those pointers as shown in Figure 6. The parsing process proceeds similarly. The main difference is that the object circuit is not a string of words but a set of elements. Also, every elements has a structure representing the circuit topology.

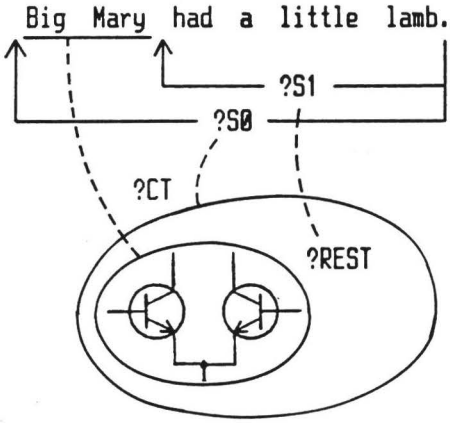

Figure 6: Sentence vs. Circuit

Feeding in the following goal causes Duck to start parsing. "cd71" stands for the tuple of CD71.

```
(SUBCT (I-COMPARATOR ?NAME ?IN ?OUT ?POW ?GND)
       cd71 !<>)                                    (3)
```

As the last argument of the predicate SUBCT is substituted by a null circuit "!<>", the goal asks whether the total circuit CD71 pictured in Figure 1 is a macro element "comparator with internal voltage reference". The comparator is defined as a conjunction of two sub-goals: "single-ended differential amplifier", and "voltage source" for reference. "differential amplifier" is defined as a conjunction of "emitter-coupled pair", "current source", and a resistor for load. "voltage source" is defined by either "voltage regulator" or "voltage divider" as disjunctive sub-goals. These goals are searched in top-down depth-first manner. The initial goal (3) succeeds, and we can eventurally acquire values for the variables:

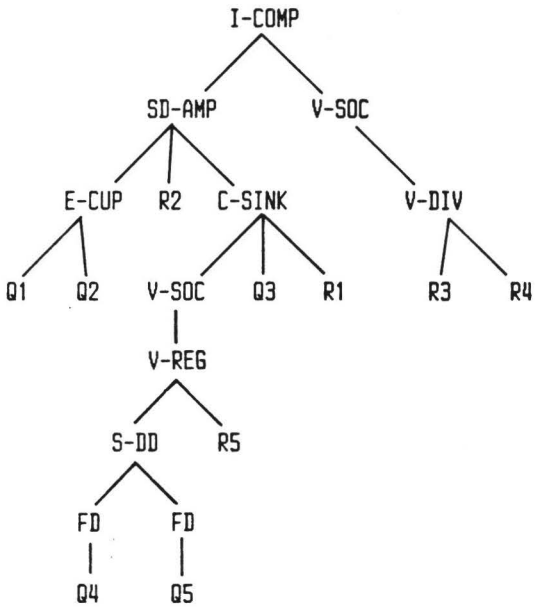

Figure 7: Parse Tree

```
NAME = (I-COMP
          (SD-AMP
             (E-CUP Q1 Q2)
             R2
             (C-SINK
                (V-SOC
                   (V-REG
                      (S-DD (FD Q4) (FD Q5)) R5))
                Q3 R1))
          (V-SOC (V-DIV R3 R4)))
IN = #9
OUT = #10
POW = #2
GND = #1
```

The name of the macro element keeps track of succeeded goals. It forms a hierarchical structure of macro elements and can be viewed as a parse tree for the circuit corresponding to the syntactic structure of a sentence (Figure 7).

C. Behavior of "SUBCT"

Functional blocks in analog IC designs are coded into deductive rules. The rules define a set of circuits in the same way that generative grammars define a language. If the object circuit is given, and if the circuit is a member of the set, the following goal parses the circuit.

```
(SUBCT ?WHAT-CIRCUIT object-circuit !<>)
```

In this case, the top-down mechanism does not work efficiently, because the first argument does not have information about how to parse the circuit. Duck tries the rules one after another until the rest part of SUBCT becomes a null circuit !<>. This parsing mechanism works effectively when a circuit goal is given such as (3).

Even if an object circuit is not a member of the set, if the null circuit !<> is replaced by a variable ?REST, the goal can identify all functional blocks which are defined as macro elements in the circuit.

As a consequence of its realization in logic programming, data flows to the predicate SUBCT are bilateral. If a macro element is given instead of the object circuit, the following goal works as a circuit generator. We can then acquire the generated circuit from the variable ?CT.

```
(SUBCT macro-element ?CT !<>)
```

IV ELECTRICAL CONDITIONS

A. Transferring Conditions between Goals

A "voltage divider" is defined by a pair of resistors "(V-DIV ?X ?Y)" as shown in Figure 8. Duck finds ten voltage dividers in the circuit of Figure 1 according to the definition, but eight of them such as "(V-DIV R1 R4)" are not intended as voltage dividers. These undesired interpretations do not form macro elements which contribute to the goal of total circuit, so they are to be rejected in the parsing process. If we are informed that #1 and #2 are power nodes connected to the power supply, we can reject undesired

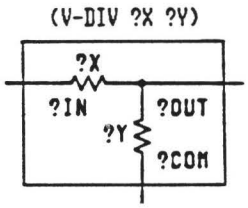

Figure 8: Voltage divider

interpretations more efficiently. That is, we can use an electrical condition which states that the node ?OUT of a voltage divider must not be connected to power nodes.

The electrical conditions are not only used as inputs for identifying a macro element, but also used as outputs. If "voltage regulator" is identified in a circuit, we can assume that the input node ?IN and the common node ?COM of the voltage regulator must be power nodes. Those assumptions are used afterward in identifying another macro element such as a voltage divider efficiently. In order to transfer the information between goals, we will introduce new variables "?IN-COND" and "?OUT-COND" to form a new predicate "SUBCTC" (sub-circuit with conditions).

We will also re-define "voltage regulator" using this predicate:

```
(<- (SUBCTC
      (V-REGULATOR (V-REG ?D ?R) ?IN ?OUT ?COM)
      ?CT ?REST ?IN-COND ?OUT-COND)
    (AND (SUBCT (S-DIODE ?D ?OUT ?COM) ?CT ?RT1)
         (SUBCT (RES ?R ?IN ?OUT) ?RT1 ?REST)
         (NONMEMBER (POWER-NODE ?OUT) ?IN-COND)
         (= ?OUT-COND
            !<(POWER-NODE ?IN) (POWER-NODE ?COM)
              !&?IN-COND>)))
```

B. Context-dependent Circuit Generation

Suppose that a goal generates two conjunctive sub-goals and each goal generates a voltage source in designing circuits. When one of the voltages is derived from the other, an engineer may combine two voltage sources into one voltage source for simplicity. That is, he has the ability to use context dependent circuit generation rules, while we have developed the rules corresponding to context-free grammars.

Using the predicate SUBCTC, we can overcome the problem of combining circuits. When a subgoal finds a voltage source, the subgoal generates information pertaining to the voltage source as an electrical condition and transfers the information to another subgoal which needs a voltage source. Then the subgoal succeeds by the transferred conditions instead of finding another voltage source.

C. Rules for Combined Circuits

We will define the voltage source using the predicate SUBCTC, so that it generates a term "(CTRLD-VOLTAGE (V-SOC ?V) ?OUT ?COM)" as an electrical condition for the output. The condition states that the voltage across ?OUT and ?COM is controlled by the voltage source "(V-SOC ?V)". If the goal succeeds, the rest of the circuit no longer contains the voltage source, but the ?OUT-COND contains the electrical condition term for another goal which needs a voltage source. Using this condition, we can define a current source which shares its voltage source with another circuit.

V CONCLUSION

An electronic circuit is designed as a goal oriented composition of functional blocks. Therefore, if a circuit goal is given, the goal contains the information needed to read the circuit. The top-down mechanism effectively analyzes an electronic circuit according to the goal. The parsing circuit topology is a step toward automatic circuit understanding similar to syntactic analysis of language. But, circuit understanding implies more than language understanding; unlike language, a circuit not only represents designer's intentions, but also represents the physical circuit itself.

We have tacitly employed a closed world assumption on circuit topology. That is, no element or device exists without being explicitly included in the circuit tuple. However, the closed world assumption is no longer appropriate for a tuple of electrical conditions. The tuple represents only a small portion of the electrical properties of an object circuit. If a specific term is not found in the tuple, we can not conclude that the circuit does not have the electrical property denoted by the term. Negative information on electrical conditions must be explicitly mentioned in an open world assumption.

The electrical conditions define the relationship between a circuit topology and its electrical characteristics. We can introduce more terms relating to electrical behavior to the definitions of functional circuits. We may introduce terms of the form "(<- q p)" in which "p" and "q" specify electrical behavior. When a circuit goal succeeds, the argument ?OUT-COND of the predicate SUBCTC contains rules of electrical behavior for the circuit. We are now in the process of developing such rules.

ACKNOWLEDGMENTS

I would like to thank: Prof. Drew McDermott for Duck, Isao Nagasawa and David Littleboy for their helpful advice, and AI-circle AIUEO for discussions.

REFERENCES

[1] DeKleer, J. "Causal and Teleological Reasoning in Circuit Recognition" MIT AI-TR-529, 1979.
[2] McDermott, D. "Duck: A Lisp-based Deductive System" Dept. of CS, Yale Univ., 1983.
[3] Pereira, F. and Warren, D. "Definite Clause Grammars for Language Analysis" Artificial Intelligence 13 (1980) 231-278.
[4] Tanaka, T. "Representation and Analysis of Electrical Circuits in a Deductive System" Proc. IJCAI-83, Karlsruhe W.-Germany, August 1983, pp. 263-267.
[5] Tanaka, T. "Structural Analysis of Electronic Circuits in a Deductive System" to appear in Computer Expert Systems, Leonard Bolc ed., Springer-Verlag, 1985.
[6] "101 Analog IC Designs" Interdesign Inc., Sunnyvale Ca., 1976